THERMANN™

COMMERCIAL GUIDE

HOT WATER HEATERS FOR COMMERCIAL & HIGH USE PROJECTS



CONTENTS

Commercial Continuous Flow Range	4
Performance Pack PP1150	16
Commercial Electric Storage Range	20
Commercial Manifold Systems	24
Technical specifications & manifold codes	31
Commercial accessories	35
Commercial dimensions	38



We are dedicated to highest quality, great design and innovation, offering a comprehensive range of continuous flow and electric solutions to suit most commercial projects.

The THERMANN Commercial range has been especially developed and designed for commercial applications by incorporating larger more robust heat exchangers or multi-element configurations.

Whether it is an apartment, hotel, office block or restaurant, THERMANN Commercial has a water heating system to meet your project requirement.

With safety, durability and reliability, THERMANN water heaters are the ultimate commercial solution.

WARRANTY

CONTINUOUS FLOW

All THERMANN Commercial continuous flow products have a 5 year warranty on the heat exchanger and a 2 year warranty on heater parts and labour. When used in a domestic situation, a 12 year warranty on the heat exchanger and a 3 year warranty on heater parts and labour, applies.

Commercial		Domestic	
5 YEAR QUALITY GUARANTEE	2 YEAR QUALITY GUARANTEE	12 YEAR QUALITY GUARANTEE	3 YEAR QUALITY GUARANTEE
Heat Exchanger	Parts and Labour	Heat Exchanger	Parts and Labour

ELECTRIC STORAGE

All THERMANN Commercial electric storage products have a 5 year warranty on the tank and a 1 year warranty on heater parts and labour. When used in a domestic situation, a 10 year warranty on the tank and a 1 year warranty on heater parts and labour, applies.

Commercial		Domestic	
5 YEAR QUALITY GUARANTEE	1 YEAR QUALITY GUARANTEE	10 YEAR QUALITY GUARANTEE	1 YEAR QUALITY GUARANTEE
Tank	Parts and Labour	Tank	Parts and Labour

See installation manual for full details.



COMMERCIAL CONTINUOUS FLOW RANGE

ROBUST COMMERCIAL DESIGN

The THERMANN Commercial continuous flow range is designed for commercial applications which have greater daily water usage.

1 HOUR A DAY **8 HOURS A DAY**



DOMESTIC USE COMMERCIAL USE

SIZE REALLY DOES MATTER

High grade commercial components such as heat exchangers with 25% thicker pipes and 20% thicker fins to allow the THERMANN Commercial continuous flow range to meet the higher water use and flow rates required for commercial applications. For greater water flow and lower pressure loss, THERMANN Commercial uses up to 50% larger pipes compared to those used in domestic applications.



DOMESTIC HEAT EXCHANGER

THERMANN 28L & 32L
COMMERCIAL HEAT EXCHANGER

THERMANN 50L
COMMERCIAL HEAT EXCHANGER

THERMANN COMMERCIAL
CONDENSING

50L

50L OUTDOOR

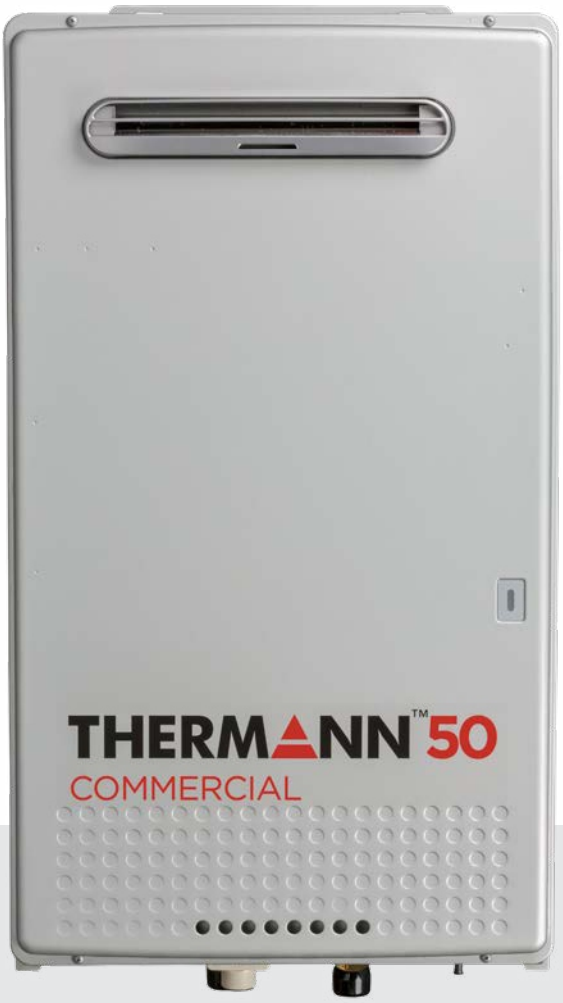

50L INDOOR



BREAKING NEW GROUND
IN COMMERCIAL WATER HEATING

The THERMANN 50L Commercial water heater is the largest capacity continuous flow water heater available in the Australian market. It is specially designed for applications that demand extra delivery of hot water with a smaller footprint. This product is exclusive to THERMANN.

- The THERMANN 50L model delivers savings - less time to install, less materials used and less space consumed.
- Condensing technology delivers 95% nominal heating efficiency, providing running cost savings.
- Designed for commercial applications using commercial grade components & robust heat exchangers with thicker pipes and fins.
- Modular design enabling up to 12 units to be linked together providing flow rates as low as 2.0L/min to 600 L/min.
- Low NOx burner provides improved emissions and air quality.
- 50L 50°C locked models available for Outdoor and Indoor models.

50L PERFORMANCE DATA

FLOW RATE L/min	Max	50
	20°C rise	50
	25°C rise	50
	35°C rise	36
	50°C rise	25
	60°C rise	21
	70°C rise	18

*Performance data for both 50L Outdoor and Indoor models, based on 15°C cold water.

50L DIMENSIONS

50L OUTDOOR

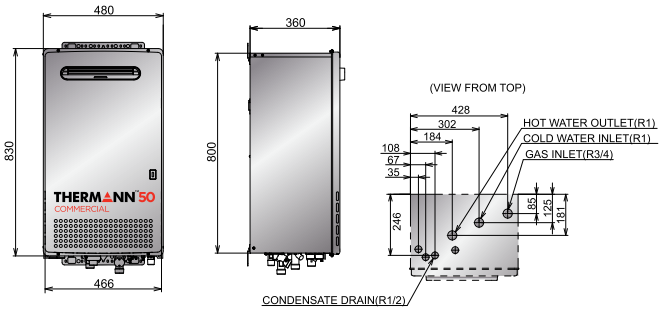

50L INDOOR

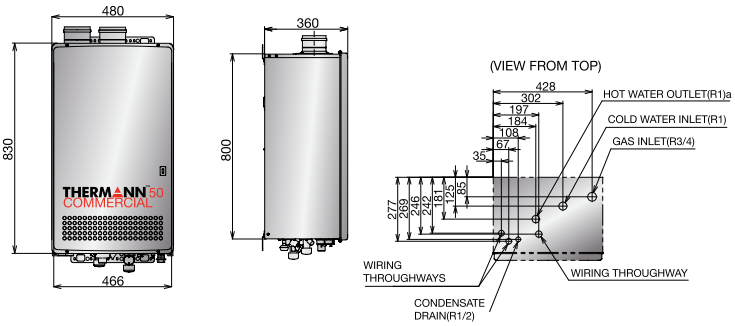

CONDENSING IS THE FUTURE OF CONTINUOUS FLOW

In a condensing continuous flow water heater, the water is preheated using the heat from the exhaust gas, reducing wasted energy and lowering the exhaust temperature.

In a non-condensing unit, the water only passes through one heat exchanger and the energy from the exhaust gas is wasted.

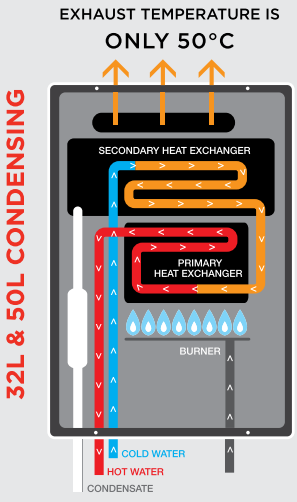

(CONDENSING TECHNOLOGY)
THERMAL EFFICIENCY UP TO 96.4%*

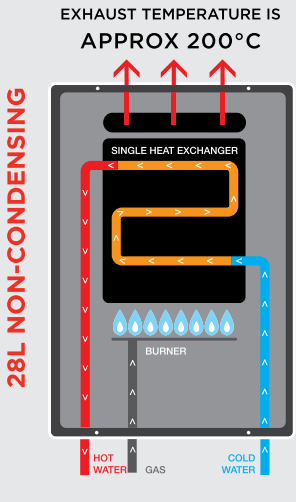

(CONVENTIONAL TECHNOLOGY)
THERMAL EFFICIENCY = 84.5%**

*Thermal Efficiency relates to 32L model.
**Thermal Efficiency related to 28L model.

THERMANN COMMERCIAL CONDENSING

32L

32L INDOOR



32L OUTDOOR



CONDENSING MODELS

- Condensing technology delivers 96.4% nominal heating efficiency, providing running cost savings.
- Designed for commercial applications using commercial grade components & robust heat exchangers with thicker pipes and fins.
- Indoor room sealed models available with horizontal or vertical discharge and open flue options.
- Modular design enabling up to 12 units to be linked together providing flow rates as low as 2.0L/min to 384 L/min.
- Low NOx burner provides improved emissions and air quality.

32L DIMENSIONS

32L INDOOR

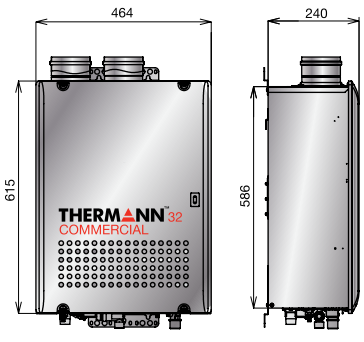

32L OUTDOOR

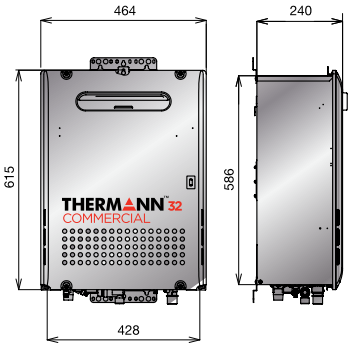

32L PERFORMANCE DATA

FLOW RATE L/min	Max	42
	20°C rise	40
	25°C rise	32
	35°C rise	23
	50°C rise	16
	60°C rise	13
	70°C rise	11

*Performance data for both 32L Outdoor and Indoor models, based on 15°C cold water.

THERMANN COMMERCIAL
NON-CONDENSING

28L

28L INDOOR



28L OUTDOOR



NON-CONDENSING MODELS

- Designed for commercial applications using robust heat exchangers with thicker pipes and fins.
- Modular design enabling up to 12 units to be linked together providing flow rates as low as 2.0L/min to 336 L/min.
- The low NOx burner provides improved emissions and air quality.
- Indoor and outdoor models available.
- Slim 350mm width design enabling replacement of existing units.
- Indoor room sealed models available with horizontal or vertical discharge and open flue options.
- 28L 50°C locked models available for Outdoor and Indoor models.

28L DIMENSIONS

28L INDOOR

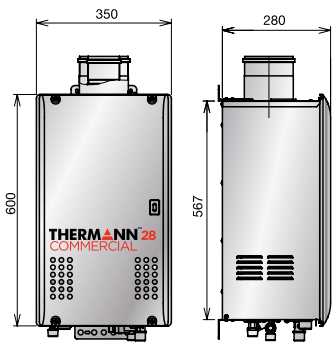

28L OUTDOOR

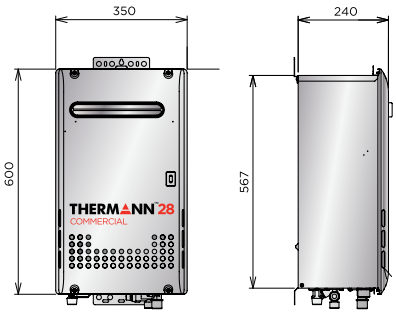

28L PERFORMANCE DATA

FLOW RATE L/min	Max	34
	20°C rise	32
	25°C rise	28
	35°C rise	20
	50°C rise	14
	60°C rise	12
	70°C rise	10

*Performance data for both 28L Outdoor and Indoor models, based on 15°C cold water.

50L/32L INDOOR
SPECIFICATION AND FLUEING ACCESSORIES

50L

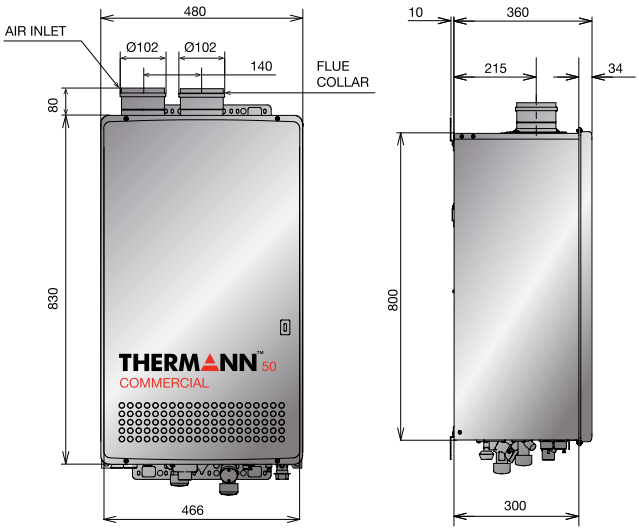

32L

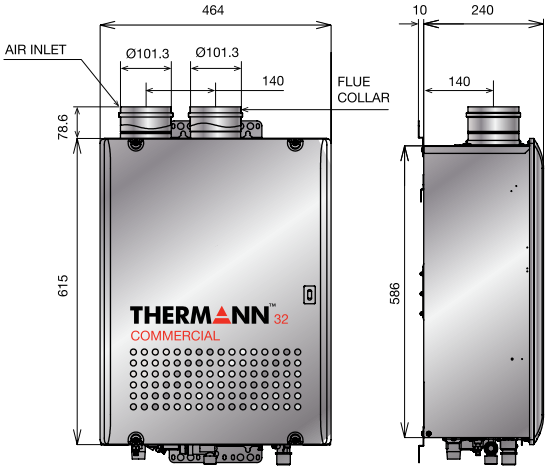

TWIN FLUEING OPTIONS

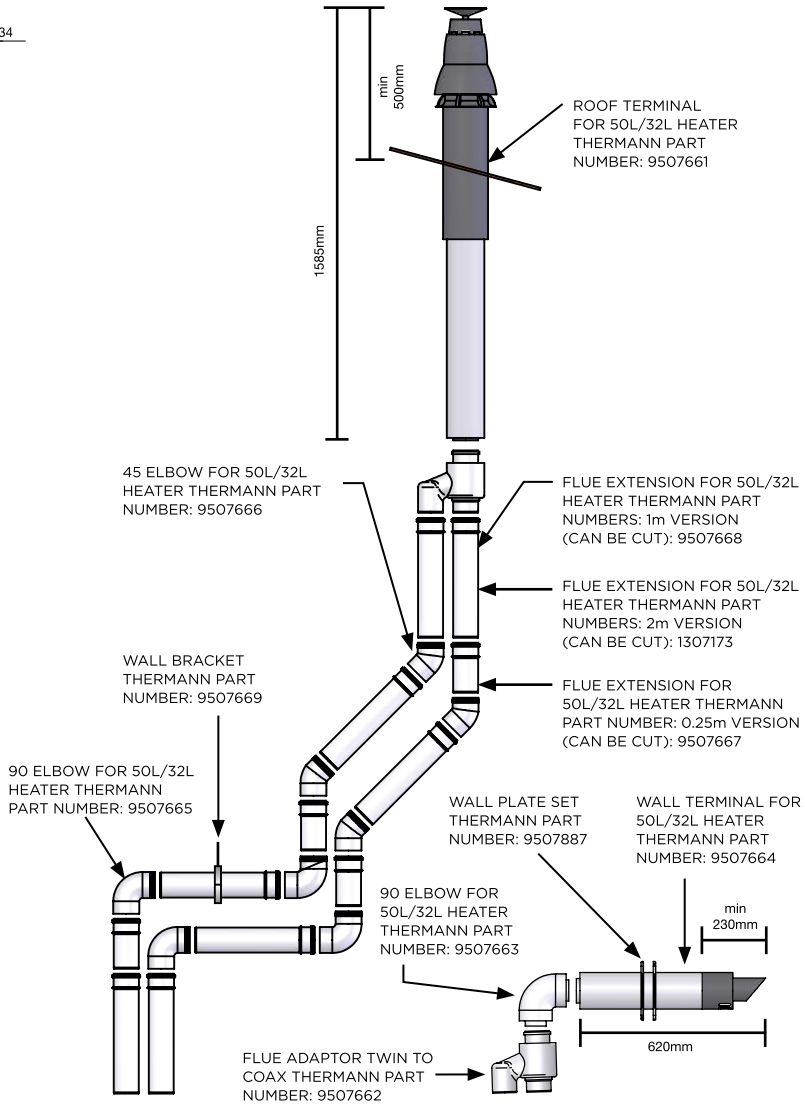

50L INDOOR

Number of elbows	0	1	2	3
Max length meters	9	7	6	5

Installation must comply with AS/NZS 5601

32L INDOOR

Number of elbows	0	1	2	3
Max length meters	14	12	11	9

Installation must comply with AS/NZS 5601

NOTE

These flue components can only be used in conjunction with standalone 50L & 32L indoor water heaters or manifolds with 50L/32L indoor water heaters

50L/32L INDOOR
FLUEING ACCESSORIES

The THERMANN Commercial 50L & 32L models are room sealed heaters that use a twin flue system. One pipe allows exhaust gases to travel out of the continuous flow heater, whilst the other pipe allows air in for combustion. The flue pipes are constructed from Polypropylene (PP), ensuring they are lightweight and easy to work with. PP pipes can be used on the 50L & 32L as they are a condensing heaters with lower temperature exhaust gases.



ROOF TERMINAL
Thermann Part # 9507661
COAX 100/150



WALL TERMINAL
Thermann Part # 9507664
COAX 100/150



ELBOW 90°
Thermann Part # 9507665
ELBOW TWIN 90° 100



ELBOW 45°
Thermann Part # 9507666
ELBOW TWIN 45° 100



FLUE EXTENSION
Thermann Part # 9507667
0.25M TWIN 100
(CAN BE CUT)

FLUE EXTENSION
Thermann Part # 9507668
1M TWIN 100
(CAN BE CUT)

FLUE EXTENSION
Thermann Part # 1307173
2M TWIN 100
(CAN BE CUT)



ELBOW 90° COAXIAL 100-150
Thermann Part # 9507663
ELBOW TWIN 90° 100



FLUE ADAPTOR - TWIN TO COAX
Thermann Part # 9507662

This component is required with wall and roof terminals in case of room sealed installation.



WALL BRACKET
Thermann Part # 9507669

Wall bracket is required to secure the flue part to the wall.



WALL PLATE SET 150
Thermann Part # 9507887



KIT-OPEN FLUE ADAPTOR
Thermann Part # 9508213
Note: For special applications only

NOTE

THERMANN Commercial continuous flow products are certified for use with these flue components and accessories ONLY.

Be aware that you may have to adjust the dip switches inside the water heater to achieve the specified system performance, depending on the total length of the flue pipe. Refer to the installation instructions for maximum flue lengths, and dipswitch settings.

28L INDOOR
SPECIFICATION AND FLUEING

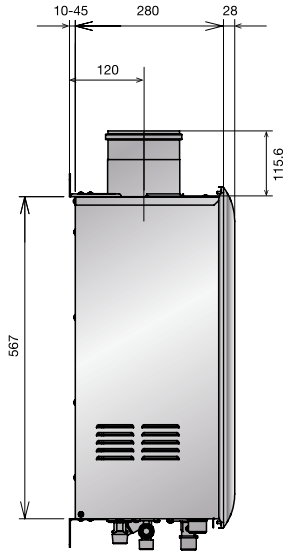

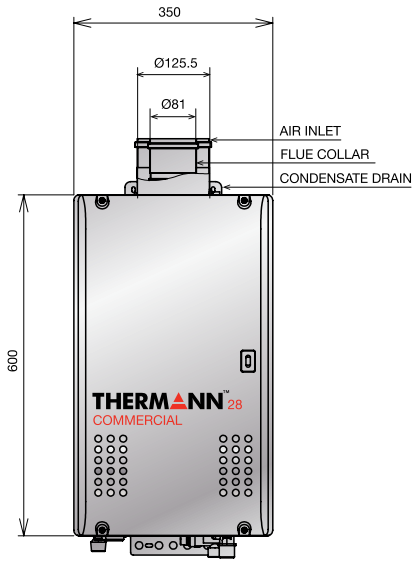

28L FLUEING OPTIONS

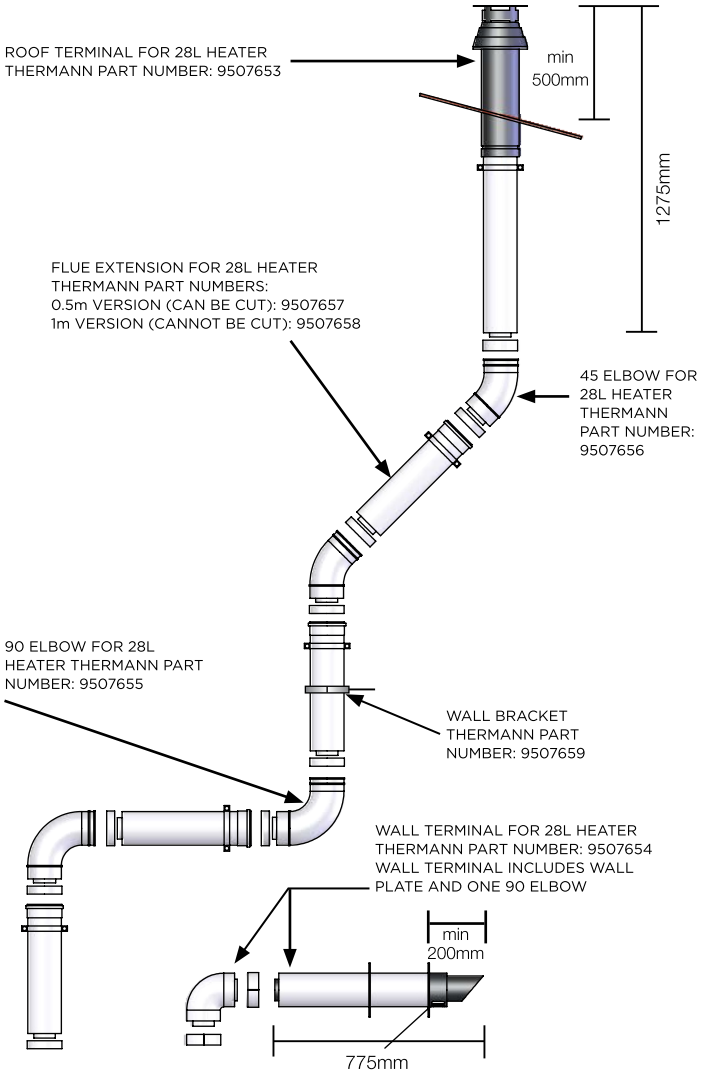

Number of elbows	0	1	2	3	4	5	6
Max length meters	13	11	9	7	5	4	2

Installation must comply with AS/NZS 5601

NOTE

These flue components can only be used in conjunction with standalone 28L indoor water heaters, 28L manifolds or the Performance Pack 1150 with an indoor 28L water heater.

28L INDOOR
FLUEING ACCESSORIES

The THERMANN Commercial 28L Indoor model is designed as a room sealed system that uses a coaxial flue. The flue is made up of a durable, stainless steel inner pipe which carries exhaust gases out of the continuous flow heater to the outdoor atmosphere, whilst the white powder coated steel outer pipe draws air in for combustion.



ROOF TERMINAL
Thermann Part # 9507653
COAX 80/125



FLUE EXTENSION
Thermann Part # 9507657
0.5M COAX 80/125
(CAN BE CUT)

FLUE EXTENSION
Thermann Part # 9507658
1M COAX 80/125
(CANNOT BE CUT)

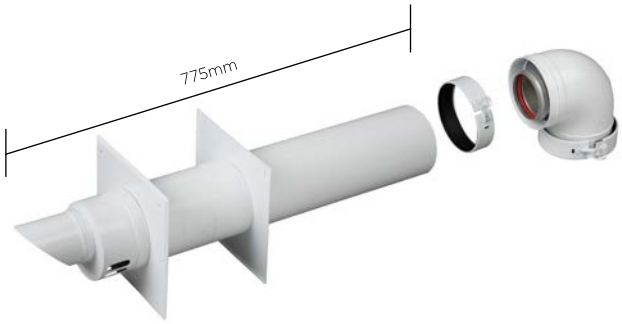

WALL TERMINAL
Thermann Part # 9507654
COAX 80/125

Wall terminal includes wall plate set and one 90° elbow



WALL BRACKET 125
Thermann Part # 9507659

Wall bracket is required to secure the flue parts to the wall



Elbow 90°
Thermann Part # 9507655
COAX 90° 80/125



ELBOW 45°
Thermann Part # 9507656
COAX 45° 80/125



KIT-OPEN FLUE ADAPTER 28L
Thermann Part # 9508212

Note: For special applications only

NOTE

THERMANN Commercial continuous flow products are certified for use with these flue components and accessories ONLY.

Be aware that you may have to adjust the dip switches inside the water heater to achieve the specified system performance, depending on the total length of the flue pipe. Refer to the installation instructions for maximum flue lengths, and dipswitch settings.

INDOOR AND OUTDOOR CONTINUOUS FLOW SPECIFICATIONS

MODEL		50L Outdoor	50L Indoor	32L Outdoor	32L Indoor	28L Outdoor	28L Indoor
Product Codes		NG - 1307010 LPG - 1307011	NG - 1307012 LPG - 1307013	NG - 9507241 LPG - 9507242	NG - 9507243 LPG - 9507244	NG - 9507237 LPG - 9507238	NG - 9507239 LPG - 9507240
Capacity L/min @ 25°C rise		50	50	32	32	28	28
Location		Outdoor	Indoor	Outdoor	Indoor	Outdoor	Indoor
Thermal Efficiency^ %		95	95	96.4	96.4	84.5	84.5
Water Pressure (kPa) *for "S" models only*		250 - 1,000	250 - 1,000	200 - 1,000	200 - 1,000	200 - 1,000	200 - 1,000
Minimum Flow Rate (L/min) *for "S" models only*		2.0	2.0	2.0	2.0	2.0	2.0
Dimensions H x W x D (mm)		830 x 480 x 370	830 x 480 x 360	615 X 464 X 240	615 X 464 X 240	600 X 350 X 240	600 X 350 X 280
Weight (kg)		50	55	32	32	26	26
Connection Sizes	Water Inlet	R1 (25mm)	R1 (25mm)	R 3/4 (20mm)	R 3/4 (20mm)	R 3/4 (20mm)	R 3/4 (20mm)
	Hot Water Outlet	R1 (25mm)	R1 (25mm)	R 3/4 (20mm)	R 3/4 (20mm)	R 3/4 (20mm)	R 3/4 (20mm)
	Gas Inlet	R 3/4 (20mm)	R 3/4 (20mm)	R 3/4 (20mm)	R 3/4 (20mm)	R 3/4 (20mm)	R 3/4 (20mm)
	Drain Line	R 1/2 (15mm)	R 1/2 (15mm)	R 1/2 (15mm)	R 1/2 (15mm)	NA	NA
Power Supply	Supply	230 - 240 VAC (50Hz)	230-240 VAC (50hz)	230 - 240 VAC (50Hz)	230 - 240 VAC (50Hz)	230 - 240 VAC (50Hz)	230 - 240 VAC (50Hz)
	Consumption (W)	Operation 83 Freeze Prevention 288	Operation NG/ULPG 123.6/142.5 Freeze Prevention 318	Operation 75 Freeze Prevention 223	Operation 75 Freeze Prevention 223	Operation 75 Freeze Prevention 193	Operation 75 Freeze Prevention 193
Gas Consumption	NG (MJ/hr)	328	328	217	217	220	205
	ULPG (MJ/hr)	328	328	217	217	220	205
Gas Pressure	NG (kPa)	1.13 - 3.00	1.13 - 3.00	1.13 - 3.00	1.13 - 3.00	1.13 - 3.00	1.13 - 3.00
	ULPG (kPa)	2.75 - 3.50	2.75 - 3.50	2.75 - 3.50	2.75 - 3.50	2.75 - 3.50	2.75 - 3.50
Locked models (Preset to 50°C) Unlocked models (Preset to 60°C)	Dipswitch unlocked °C	55, 60, 75, 80	55, 60, 75, 80	55, 60, 75, 80	55, 60, 75, 80	55, 60, 75, 80	55, 60, 75, 80
	Controller unlocked °C	37 - 80	37 - 80	37 - 80	37 - 80	37 - 80	37 - 80
	Dipswitch locked °C	40, 42, 45, 50	40, 42, 45, 50	40, 42, 45, 50	40, 42, 45, 50	40, 42, 45, 50	40, 42, 45, 50
	Controller locked °C	37 - 50 (+max. 4°C)	37 - 50 (+max. 4°C)	37 - 50 (+max. 4°C)	37 - 50 (+max. 4°C)	37 - 50 (+max. 4°C)	37 - 50 (+max. 4°C)

Note: 85°C models are available upon request.
*50°C locked models available in 50L & 28L models upon request
^Thermal efficiency as tested with 15°C inlet water temperature and 60°C hot water outlet temperature at maximum burn capacity.
For applications requiring 85°C, maximum temperature setting, these must be special ordered from your local Reece branch.

COMMERCIAL CONTINUOUS FLOW PERFORMANCE DATA

MODEL		50L Outdoor/Indoor	32L Outdoor/Indoor	28L Outdoor/Indoor
FLOW RATE L/min	Max	50	42	34
	20°C rise	50	40	32
	25°C rise	50	32	28
	35°C rise	36	23	20
	50°C rise	25	16	14
	60°C rise	21	13	12
	70°C rise	18	11	10

*Performance data based on 15°C cold water.

NOTES



PERFORMANCE PACK PP1150

THERMANN
PERFORMANCE PACK

PERFORMANCE PACK 1150

INDOOR



OUTDOOR



THE THERMANN PERFORMANCE PACK IS THE ULTIMATE PACKAGE FOR DELIVERING LARGE VOLUMES OF HOT WATER AT MAINS PRESSURE.

By linking the power of a commercial continuous flow unit, with a 315L commercial-grade storage tank, the THERMANN Performance Pack can deliver a whopping 1155L in the 1st hour. For facilities that require large amounts of hot water fast, the THERMANN Performance Pack provides a compact, intelligent solution.

- The THERMANN Performance Pack 1150 comes with two inlet options to allow flexibility and easy change over.
- Tank pack & continuous flow unit are supplied separately to allow ease of install, reducing the need to lift the entire unit in place. Simply put the pack in place, hang the unit, connect the flex hoses and power.
- The THERMANN Performance Pack 1150 comes in both outdoor and indoor models with flueing options available. When indoor models are installed with balanced flueing they can be hidden inside cupboards.

PERFORMANCE PACK DIMENSIONS

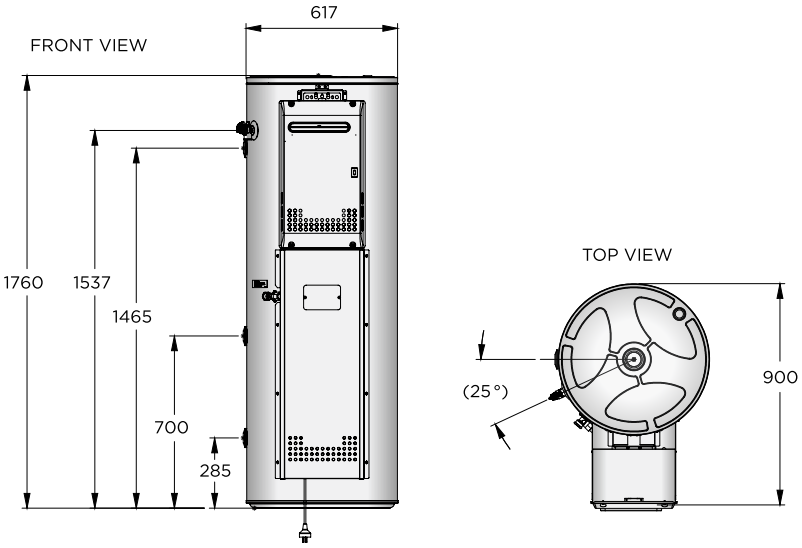

PERFORMANCE DATA

DELIVERY HOUR	DELIVERY (L)
1st	1155
2nd	1995
3rd	2835
6th	5355

MANIFOLDS MADE SIMPLE

For large commercial applications, the THERMANN Performance Pack 1150 can be manifolded together to create a massive amount of hot water. A maximum of 8 Performance Pack 1150 systems can be manifolded together, generating a massive 9240L in the 1st hour. This would be the equivalent of supplying a 185-bed hotel.

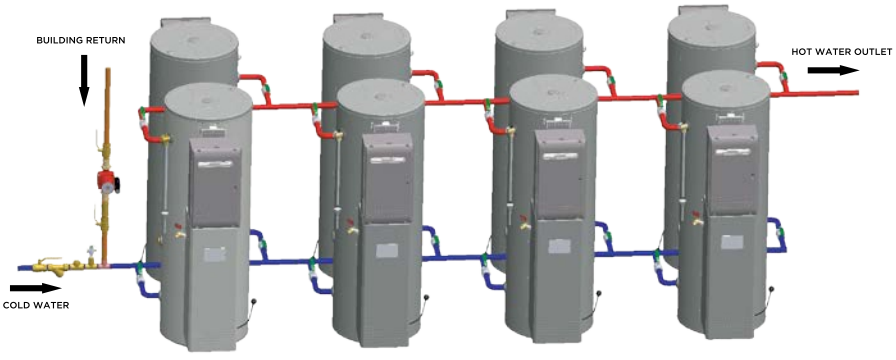

PERFORMANCE PACK SPECIFICATIONS

				Peak Length (L/hr)			
Model Number	Unit QTY	L/hr @ 50C Rise	Storage (L)	1hr	2hr	3hr	6hr
T12813xxTK*	1	840	315	1155	1995	2835	5355
	2	1680	630	2310	3990	5670	10710
	3	2520	945	3465	5985	8505	16065
	4	3360	1260	4620	7980	11340	21420
	5	4200	1575	5775	9975	14175	26775
	6	5040	1890	6930	11970	17010	32130
	7	5880	2205	8085	13965	19845	37485
	8	6720	2520	9240	15960	22680	42840

*T12813 + (F or E) + (N or L) + TK
(Flue or External) + (Natural or ULPG)


COMMERCIAL
ELECTRIC
STORAGE RANGE

FOR USE IN HIGH DEMAND
COMMERCIAL APPLICATIONS

The THERMANN Commercial 315L & 50L electric storage water heaters are low maintenance, offer high performance and fast recovery via multiple elements heating water at the same time. They are perfect for heavy demand commercial and industrial applications.

They are a great alternative where reticulated gas is not available, flueing arrangements are impractical or when used as a boost plant for solar or supplementary heating.

COMMERCIAL WARRANTIES

315L Models | Tank* | Parts and Labour*

*For full warranty information please see the installation manual

3 ELEMENT



3 ELEMENT



6 ELEMENT



- 315L capacity comes with a choice of 3 or 6 electric heating elements working concurrently for fast recovery and the option of 3.6kW, 4.8kW or 6.0kW element configurations
- 50L model comes with 3 x 3.6kW electric heating elements working concurrently for fast recovery in tight spaces
- 315L models made in Australia
- 32mm connections for high flow applications (315L models only)
- They can be manifolded for heavier demand or plumbed to additional water heater systems for supplementary boosting
- For use in high demand commercial applications
- Adjustable thermostat setting from 60°C to 80°C for the 315L models and 60°C to 75°C for 50L models. Both are set to 70°C ex factory.
- 5 year tank and 1 year parts & labour commercial warranty. Same warranty applies maximum temperature ratings.

COMMERCIAL ELECTRIC
PERFORMANCE DATA

LITRES OF WATER AVAILABLE AT 50°C RISE OVER PEAK USAGE PERIOD

MODEL	ELEMENT CONFIGURATION	NO OF UNITS MANIFOLDED	STORAGE CAPACITY	RECOVERY L/HR#	1ST HOUR DELIVERY	1½ HOUR DELIVERY	2 HOUR DELIVERY	3 HOUR DELIVERY	6 HOUR DELIVERY
1307303	3 X 3.36KW	1	50	186	236	329	422	608	1166
		2	100	372	472	658	844	1216	2332
1307304	3 X 3.6KW	1	315	186	501	594	687	873	1431
		2	630	372	1,002	1,188	1,374	1,746	2,862
1307305	3 X 4.8KW	1	315	248	563	687	811	1,059	1,803
		2	630	496	1,126	1,374	1,622	2,118	3,606
		3	945	744	1,689	2,061	2,433	3,177	5,409
1307306	3 X 6.0KW	1	315	310	625	780	935	1,245	2,175
		2	630	620	1,250	1,560	1,870	2,490	4,350
		3	945	930	1,875	2,340	2,805	3,735	6,525
1307307	6 X 3.6KW	1	315	372	687	873	1,059	1,431	2,547
		2	630	744	1,374	1,746	2,118	2,862	5,094
1307308	6 X 4.8KW	1	315	496	811	1,059	1,307	1,803	3,291
		2	630	992	1,622	2,118	2,614	3,606	6,582
		3	945	1,488	2,433	3,177	3,921	5,409	9,873
1307309	6 X 6.0KW	1	315	620	935	1,245	1,555	2,175	4,035
		2	630	1,240	1,870	2,490	3,110	4,350	8,070
		3	945	1,860	2,805	3,735	4,665	6,525	12,105
		4	1,260	2,480	3,740	4,980	6,220	8,700	16,140
		5	1,575	3,100	4,675	6,225	7,775	10,875	20,175
		6	1,890	3,720	5,610	7,470	9,330	13,050	24,210

Note: Figures rounded up to the nearest litre. # Recovery L/hr @ 50°C temperature rise.

LITRES OF HOT WATER AVAILABLE AT 65°C RISE OVER PEAK USAGE PERIOD

MODEL	ELEMENT CONFIGURATION	NO OF UNITS MANIFOLDED	STORAGE CAPACITY	RECOVERY L/HR#	1ST HOUR DELIVERY	1½ HOUR DELIVERY	2 HOUR DELIVERY	3 HOUR DELIVERY	6 HOUR DELIVERY
1307304	3X3.6KW	1	315	143	458	530	601	744	1,173
		2	630	286	916	1,059	1,202	1,488	2,346
1307305	3X4.8KW	1	315	191	506	602	697	888	1,461
		2	630	382	1,012	1,203	1,394	1,776	2,922
		3	945	573	1,518	1,805	2,091	2,664	4,383
1307306	3X6.0KW	1	315	239	554	674	793	1,032	1,749
		2	630	478	1,108	1,347	1,586	2,064	3,498
		3	945	717	1,662	2,021	2,379	3,096	5,247
1307307	6X3.6KW	1	315	286	601	744	887	1,173	2,031
		2	630	572	1,202	1,488	1,774	2,346	4,062
1307308	6X4.8KW	1	315	382	697	888	1,079	1,461	2,607
		2	630	764	1,394	1,776	2,158	2,922	5,214
		3	945	1,146	2,091	2,664	3,237	4,383	7,821
1307309	6X6.0KW	1	315	477	792	1,031	1,269	1,746	3,177
		2	630	954	1,584	2,061	2,538	3,492	6,354
		3	945	1,431	2,376	3,092	3,807	5,238	9,531
		4	1,260	1,908	3,168	4,122	5,076	6,984	12,708
		5	1,575	2,385	3,960	5,153	6,345	8,730	15,885
		6	1,890	2,862	4,752	6,183	7,614	10,476	19,062

Note: Figures rounded up to the nearest litre. # Recovery L/hr @ 65°C temperature rise.

COMMERCIAL ELECTRIC
STORAGE DIMENSIONS

THERMANN COMMERCIAL 50L TRIPLE ELEMENT STORAGE TANK

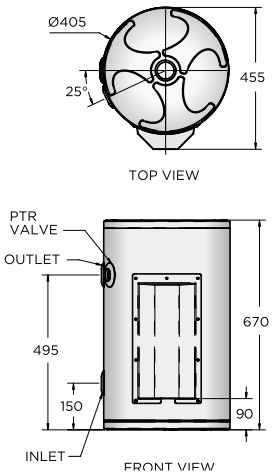

50L SPECIFICATION TABLE

SPECIFICATIONS	1307303
SPECIFICATIONS	1307303
HOT WATER DELIVERY (L)	50
NET WEIGHT EMPTY (KG)	23
ELEMENT SIZES (KW)	3 X 3.6
CABLE ENTRY SIZE (MM)	25MM
ELECTRICAL CONNECTION (3 PHASE)	400-415V
WATER CONNECTIONS FEMALE	20MM (3/4")
RELIEF VALVE PRESSURE (KPA)	1000
MAX. INLET PRESSURE (KPA)	800
MAX. THERMOSTAT SETTING	75°C

THERMANN COMMERCIAL 315L TRIPLE & SIX ELEMENT STORAGE TANKS

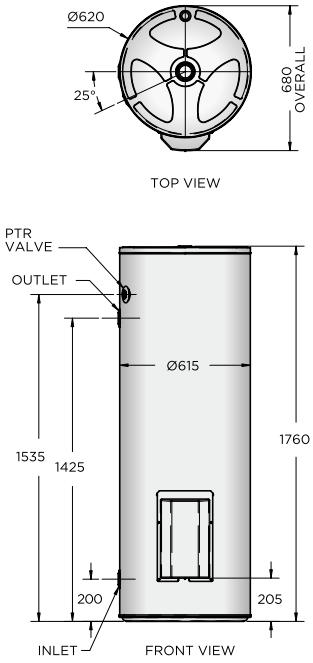

315L SPECIFICATION TABLE

SPECIFICATIONS	1307304	1307305	1307306	1307307	1307308	1307309
STORAGE CAPACITY (L)	321	321	321	321	321	321
HOT WATER DELIVERY (L)	315	315	315	315	315	315
NET WEIGHT EMPTY (KG)	93	93	93	94	94	94
ELEMENT SIZE (KW)	3 X 3.6KW	3 X 4.8KW	3 X 6.0KW	6 X 3.6KW	6 X 4.8KW	6 X 6.0KW
CABLE SIZE (MM)	25	25	25	32	32	32
ELECTRICAL CONNECTIONS (3 PHASE)	415V AC	415V AC	415V AC	415V AC	415V AC	415V AC
WATER CONNECTIONS FEMALE	32MM (1 ¼")	32MM (1 ¼")	32MM (1 ¼")	32MM (1 ¼")	32MM (1 ¼")	32MM (1 ¼")
RELIEF VALVE PRESSURE (KPA)	1000	1000	1000	1000	1000	1000
MAX INLET PRESSURE (KPA)	800	800	800	800	800	800
MAX TEMPERATURE SETTING	80°C	80°C	80°C	80°C	80°C	80°C

RELIEF VALVE	
TEMPERATURE (OC)	99
POWER RATING (KW)	46



COMMERCIAL MANIFOLD SYSTEMS

COMMERCIAL
MANIFOLD SYSTEMS

THERMANN Commercial manifold systems are suitable for any project where you need capacity, efficiency and control.

INTELLIGENT MANIFOLD SYSTEM

The ability to modulate multiple units with the use of a system controller makes THERMANN Commercial water heaters efficient and intelligent.

STORAGE OPTIONS

Manifold systems are designed to be used with or without storage tanks. The design is also suitable for systems with or without flow and return piping systems.

INTELLIGENT SYSTEM FEATURES

Additional product features provided by the intelligent system controller.

Self diagnostics for both system controller and all individual units connected to the system controller. Additional features of the controller include:

- Can control tank circulation pump Tank thermostats can be connected
- An external alarm can be connected
- Should a unit stop working, the system controller will continue to manage the load through the other working unit.

EASE OF INSTALLATION

The modular manifold system is designed to fit into building lifts and are easy to disassemble or reassemble on-site if required.

In addition manifold systems can be ordered with the heaters attached to the frame or supplying the heaters separate to the frame, allowing for easier transportation and flexibility.



TANKLESS INTELLIGENT MANIFOLD SYSTEM

ROTATION

In a manifold system, the individual THERMANN Commercial units will communicate with one another and work in unison to even out the load between the units, maximising output and system life.

BMS

The system controller can be set up to deliver signals to external BMS systems.



ROTATION FUNCTION



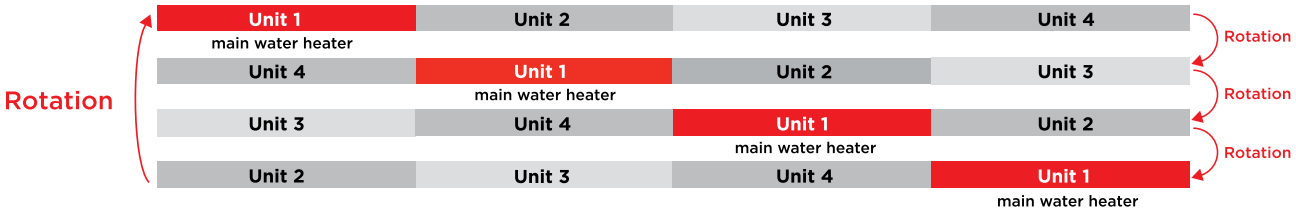

Unit rotation every 24 hours of use.

CASCADING FUNCTION

Up to 12 THERMANN Commercial units can be linked together with a single system controller. This allows variable outputs from 2.0L/min up to 600L/min to match the load requirement.



The heater will turn on when the flow is sensed.



First heater will work solely until the demand grows greater than 60%.



The load will equalize among 2 or more heaters to meet high volume demand.

A SOLUTION
FOR EVERY APPLICATION

THERMANN Commercial continuous flow water heaters can be ordered as a kit supplied separately or mounted on frame from the factory (upon special request).

- Modular configuration allows up to 12 units to be manifolded, in combinations of 2 and 3 water heater frames.
- Frames feature a solid steel, hot dip galvanised construction and are wind rated up to 100m above ground in regions A&B and terrain category 2.
- All frames feature factory mounted UV stable insulated cold & hot water header pipes, and a gas line.
- Suitable for outdoor and indoor installations.
- All frames come with certified flexible connections to water heaters.
- There are 6 different frames available;
  - 28L; 2 unit or 3 unit option
  - 32L; 2 unit or 3 unit option
  - 50L; 2 unit or 3 unit option





SITE MOUNTED OPTION

- Water heaters are not mounted to frame and require assembly to mount onto the frame on site.
- Frame comes with pipes, valves and hoses attached.
- Available to order in 2 & 3 manifold kits.
- All kit models suit ‘wall’ or ‘floor’ mounting (feet are provided with all models, & can be fitted if required).
- ‘Back to back’ configurations are available on request.
- Frames are lightweight and easy to handle.

Perfect for:

- Sites with access limitations.
- Lifts on site to plant level are not available or inadequate.
- Retrofit situations.
- For 'emergency' replacement situations where a solution is required quickly.

Note: 50L models come as site mounted option only.

FACTORY MOUNTED OPTION*

- Water heaters are mounted to the frame (ex-factory) and shipped to site pre-assembled.
- Manifold systems arrive to site ready for connection to gas and water.
- Combinations of 2 and 3 manifold frames can be combined for systems up to 12 units.
- Frames can be ordered with or without feet to suit wall or floor mounting and also with the option for 'back-to back' installation.
- Systems are custom built to specification.

Perfect for:

- New construction.
- Large, commercial fit-outs.
- Sites with goods lifts to plant level.
- Sites with crane access.
- Reducing installation time on-site.

Note: Only 28L & 32L models are available to be ordered as a factory mounted option.

**Manifolds can be factory fitted at the point of order. Please include product code 1307323 on order*

VARIATIONS
OF THE SAME SYSTEM

CHOICE

In addition to factory mounted configurations, there is also the option of ordering 1–12 manifold models with site mounted continuous flow water heaters.

Frames (including pre-fitted manifold pipe work and flexible hoses), water heaters, and an accessory box are shipped to site separately, and assembled on site.

This is perfect for retrofit applications, where site limitations are known and a speedy solution is required.

EXAMPLE SYSTEM CONFIGURATION 2 X 28L NATURAL GAS MANIFOLD

SITE MOUNTED SYSTEM

T22800ENFK



2 x 28L/min Water Heaters
(2 x 9507237)



1 x 2 Unit 28L/min Frame
(1 X 1360661)



Accessory box
Remote controller & cable, quick-connect cable and 40mm end caps
(1 x 1360658)

ACCESSORY BOXES

- All THERMANN Commercial manifolded water heaters come standard with an accessory box.
- Each accessory box typically contain a mixture of pumps, system controllers, remote controllers, unions, cables and end caps.
- The components of these boxes vary depending on the system type.

SYSTEMS WITHOUT STORAGE TANKS

2 PACK WITHOUT TANK



- 28L & 32L; 1360658
- 50L; 1360666

3 PACK WITHOUT TANK



- 28L; 1360649 + 1360665**

**These parts must be ordered separately

3 PACK WITHOUT TANK



- 32L; 1360657
- 50L; 1307017*

*Only includes the external housing for the remote controller. The remote controller is provided with the 50L system.

VARIATIONS
OF THE SAME SYSTEM

EXAMPLE SYSTEM CONFIGURATION 3 X 32L NATURAL GAS MANIFOLD WITH TANK

SITE MOUNTED SYSTEM
T33213ENFK



3 x 32L/min Water Heaters
(3 x 9507241)

1 x 3 Unit 32L/min Frame
(1 X 1360664)

Accessory box
Thermostat, pump, unions and pump lead, 40mm end caps
(1 x 1360655)

1 x 315 litre Storage tank
(9507377)

ACCESSORY BOXES

FOR STORAGE TANK SYSTEMS

1 UNIT WITH TANK



- 28L; 1360660
- 32L & 50L; 1360659

2 – 3 PACK WITH TANK



- 28L; 1360656
- 32L; 1360655

2 – 3 PACK WITH TANK



- 50L; 1307016

TANK MANIFOLD SYSTEM DIMENSIONS

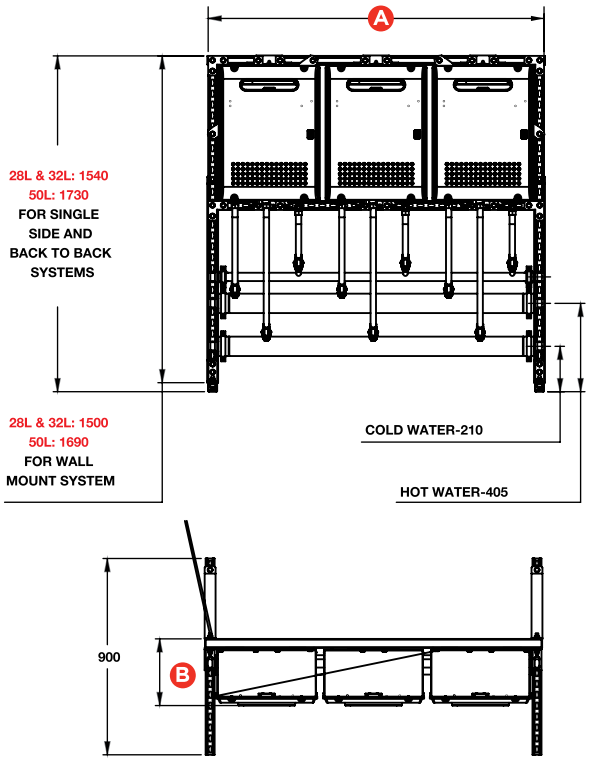

QTY OF UNITS	DIMENSION 'A' (MM)	
	28L	32L & 50L
2 UNIT	794	1040
3 UNIT	1170	1540
4 UNIT	1588	2080
5 UNIT	1964	2580
6 UNIT	2340	3080

B: FOR WALL MOUNT SYSTEMS

VERSION	DIMENSION 'B' (MM)
28L OUTDOOR	305
28L INDOOR	335
32L OUTDOOR	310
32L INDOOR	295
50L OUTDOOR	420
50L INDOOR	420

WEIGHT: MANIFOLD SYSTEM (KG)

VERSION	PACKED		UNPACKED	
	FRAME ONLY (PACKED)	FRAME INC. HEATER	FRAME ONLY	FRAME INC. HEATER
2 X 28L	50	160	40	90
3 X 28L	55	200	45	120
2 X 32L	65	175	50	110
3 X 32L	65	240	55	140
2 X 50L	60	N/A	50	N/A
3 X 50L	65	N/A	55	N/A

MANIFOLD PIPE SIZING (MM)

MODEL	50L	32L /28L
GAS	50	40
COLD	50	40
HOT	50	40

THERMANN COMMERCIAL STORAGE TANK

NOMINAL DIMENSIONS (MM)		
MODEL	315THMC0 9507377	400THMC0 9507378
Total Height (A)	1765	1705
Total Diameter (B)	615	705
Relief Valve Height (C)	1540	1430
Outlet Height (D)	1415	1430
Return Height (E)	405	390
Inlet Height (F)	210	235
SPECIFICATIONS		
MODEL	315THMC0 9507377	400THMC0 9507378
Storage Capacity (L)	321	415
Net Weight Empty (kg)	93	115
Maximum Operating Pressure (kPa)	800	
Maximum Temperature (°C)	82*	
Connections (mm) Inlet / Outlet / Return	50	
TPR	¾" 1000 kPa	

Note: Tank manifold systems will require a system controller to achieve above 75°C.

*Note - Max. manifold system tank temperature is 75°C.

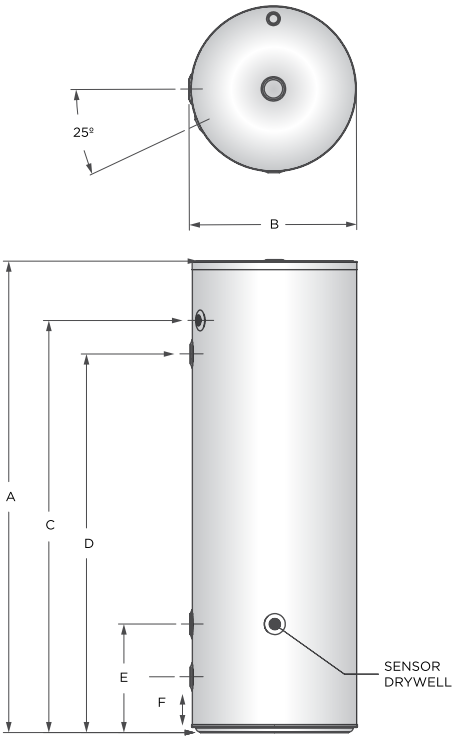

The THERMANN Commercial tank is a high performance, high capacity, low maintenance tank, designed for the heavy demand of commercial and industrial applications

FEATURES

- Suitable for water temperature from 60°C to 82°C*.
- For heavy demand application the THERMANN Commercial tanks can be manifolded together for greater flexibility.
- 50mm connections for hi-flow applications.
- Available in 315L and 400L models.
- Y class enamel – commercial grade enamel for durability.
- Australian made.
- Commercial warranty
  - 5 year tank
  - 2 year parts and labour.



TECHNICAL SPECIFICATIONS & MANIFOLD CODES

INTELLIGENT
MANIFOLD SYSTEM

		Climate	Warm				Moderate				Alpine/Cold			
		Cold water inlet	20°C				15°C				10°C			
MODEL		Hot water set	40°C	60°C	75°C	80°C	40°C	60°C	75°C	80°C	40°C	60°C	75°C	80°C
	Unit Qty	Minimum flow rate (L/min)	Maximum flow rate (L/min)				Maximum flow rate (L/min)				Maximum flow rate (L/min)			
50L Models														
TH50	1	2.0	50	31	23	19	50	28	21	18	42	25	19	17
T25000	2	2.0	100	63	45	38	100	56	42	36	83	50	38	33
T35000	3	2.0	150	94	68	58	150	83	63	54	125	75	58	50
T45000	4	2.0	200	125	91	77	200	111	83	71	167	100	77	67
T55000	5	2.0	250	156	114	96	250	139	104	89	208	125	96	83
T65000	6	2.0	300	188	136	115	300	167	125	107	250	150	115	100
T85000	8	2.0	400	250	182	154	400	222	167	143	333	200	154	133
T105000	10	2.0	500	313	227	192	500	278	208	179	417	250	192	167
T125000	12	2.0	600	375	273	231	600	333	250	214	500	300	231	200
32L Models														
TH32	1	2.0	40	20	15	12	32	18	13	11	27	16	12	11
T23200	2	2.0	80	40	29	25	64	36	27	23	53	32	25	21
T33200	3	2.0	120	60	44	37	96	53	40	34	80	48	37	32
T43200	4	2.0	160	80	58	49	128	71	53	46	107	64	49	43
T53200	5	2.0	200	100	73	62	160	89	67	57	133	80	62	53
T63200	6	2.0	240	120	87	74	192	107	80	69	160	96	74	64
T83200	8	2.0	320	160	116	98	256	142	107	91	213	128	98	85
T103200	10	2.0	400	200	145	123	320	178	133	114	267	160	123	107
T123200	12	2.0	480	240	175	148	384	213	160	137	320	192	148	128
28L Models														
TH28	1	2.0	35	18	13	11	28	16	12	10	23	14	11	9
T22800	2	2.0	70	35	25	22	56	31	23	20	47	28	22	19
T32800	3	2.0	105	53	38	32	84	47	35	30	70	42	32	28
T42800	4	2.0	140	70	51	43	112	62	47	40	93	56	43	37
T52800	5	2.0	175	88	64	54	140	78	58	50	117	70	54	47
T62800	6	2.0	210	105	76	65	168	93	70	60	140	84	65	56
T82800	8	2.0	280	140	102	86	224	124	93	80	187	112	86	75
T102800	10	2.0	350	175	127	108	280	156	117	100	233	140	108	93
T122800	12	2.0	420	210	153	129	336	187	140	120	280	168	129	112

T22800 + (F or E) + (N or L) + (F or B) + (K)*

(Flue or External) + (Natural or ULPG) + (Floor or Back to Back) + (K/Site Mounted)*

*Indicates that the system can be ordered in kit form. All kits come with feet to enable wall or floor mounting.
Not available in Back to Back configurations. The 50L model only comes as site mounted, not as a factory mounted option.

*Note: Applications requiring 85°C, maximum temperature setting, these must be special ordered from your local Reece branch.

2.0L/min flow rate only applies to the "S" Model units

TANK MANIFOLD SYSTEM
WITH STORAGE TANK

- The tank manifold systems come standard with 28L, 32L or 50L continuous flow water heaters, a THERMANN Commercial storage tank(s), tank circulating pump and a controlling thermostat.
- For example, a manifold pack of 12 x 32L units can provide up to 23,840L at a 50°C rise over a 2 hour peak.

MODEL				PEAK LENGTH (L/hr)			
MODEL NUMBER	UNIT QTY	L/hr @ 50°C RISE	STORAGE (L)	1hr	2hr	3hr	6hr
50L Models							
T15014	1	1500	400	1900	3400	4900	9400
T25014	2	3000	400	3400	6400	9400	18400
T35014	3	4500	400	4900	9400	13900	27400
T45024	4	6000	800	6800	12800	18800	36800
T55024	5	7500	800	8300	15800	23300	45800
T65034	6	9000	1200	10200	19200	28200	55200
T85034	8	12000	1200	13200	25200	37200	73200
T105044	10	15000	1600	16600	31600	46600	91600
T125044	12	18000	1600	19600	37600	55600	109600
32L Models							
T13213	1	960	315	1275	2235	3195	6075
T23213	2	1920	315	2235	4155	6075	11835
T33213	3	2880	315	3195	6075	8955	17595
T43213	4	3840	315	4155	7995	11835	23355
T53214	5	4800	400	5200	10000	14800	29200
T63214	6	5760	400	6160	11920	17680	34960
T83223	8	7680	630	8310	15990	23670	46710
T103224	10	9600	800	10400	20000	29600	58400
T123224	12	11520	800	12320	23840	35360	69920
28L Models							
T12813	1	840	315	1155	1995	2835	5355
T22813	2	1680	315	1995	3675	5355	10395
T32813	3	2520	315	2835	5355	7875	15435
T42813	4	3360	315	3675	7035	10395	20475
T52813	5	4200	315	4515	8715	12915	25515
T62814	6	5040	400	5440	10480	15520	30640
T82823	8	6720	630	7350	14070	20790	40950
T102823	10	8400	630	9030	17430	25830	51030
T122824	12	10080	800	10880	20960	31040	61280

T22813 + (F or E) + (N or L) + (F or B) + (K)*

(Flue or External) + (Natural or ULPG) + (Floor or Back to Back) + (K/Site Mounted)*

*Indicates that the system can be ordered in kit form. 2 & 3 manifold kits come with feet to enable wall or floor mounting" to "All kits come with feet to enable wall or floor mounting.

INSTALLATION DIAGRAM
CONTINUOUS FLOW

WITH TANK

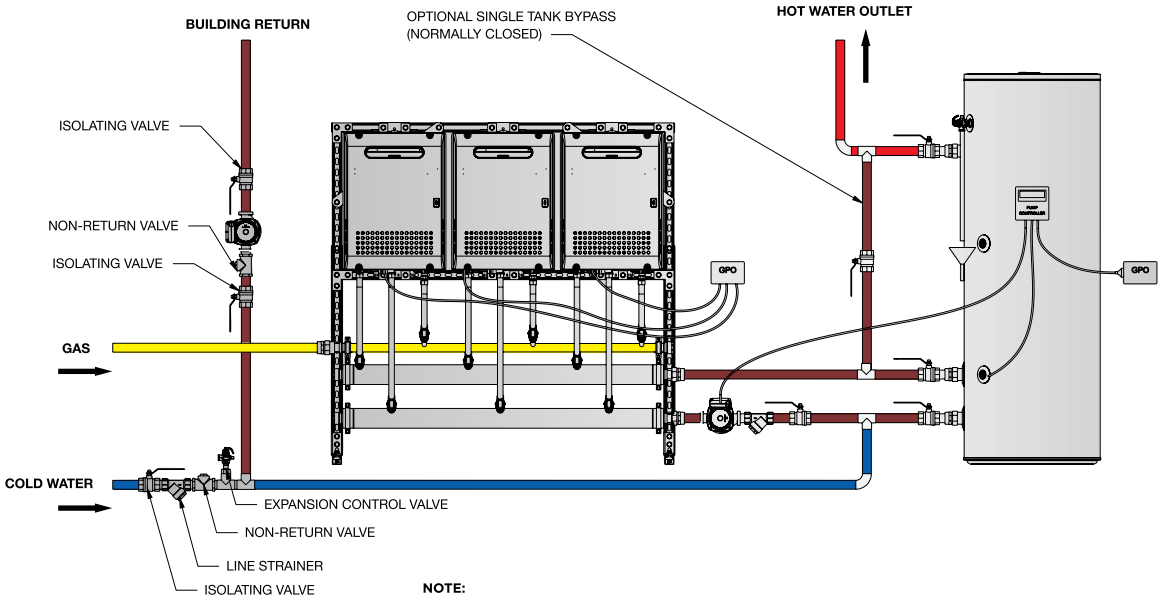

NOTE:

- THE VALVES ON THE PLUMBING CONNECTIONS AND THE BUILDING RETURN CIRCULATOR PUMP ARE NOT INCLUDED IN THE THERMANN ACCESSORY KIT
- THIS INFORMATION IS INTENDED AS A GUIDE ONLY
- COMPLIANCE WITH WATER AND/OR GAS INSTALLATION REGULATIONS IS UP TO THE ON SITE INSTALLER
- COMPONENTS MAY VARY DEPENDING ON THE ACTUAL INSTALLATION
- CHECK LOCAL REGULATIONS BEFORE INSTALLATION

WITHOUT TANK

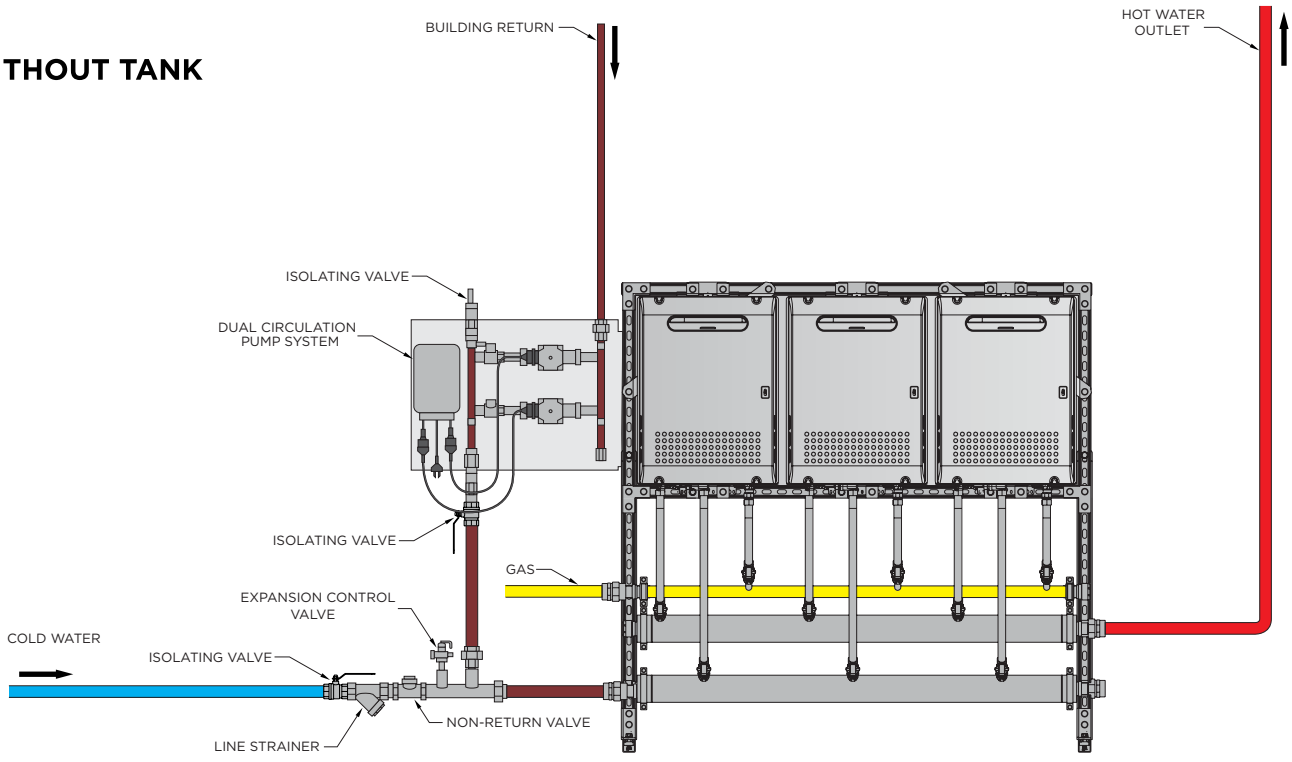

NOTE:

- CIRCULATION PUMPS ARE OPTIONAL AND DO NOT COME STANDARD WITH THE ACCESSORY KIT



COMMERCIAL ACCESSORIES

DUAL RECIRCULATION PUMPS (TANKLESS)

The Dual Pump Recirculation system is more advanced than other models on the market. Controlled by the manifolds' system controller, it can sense both flow rate and temperature to 'automatically' switch pumps in the event of failure.

This provides complete automated redundancy for the building.

Other systems require manual switching, which typically occurs after the building has run out of hot water.

- The Dual Pump Recirculation system has multiple speed settings which ensures the correct flow in the building recirculation line minimising temperature drop
- Automatic switching for seamless redundancy
- Low energy use reduces running costs (UPM3 models)
- 3 models available to suit different sizing requirements
- Pumps alternate to share load, and wear evenly, maximising product life
- Alarm functionality on the pump, or through BMS
- Can connect to the NAU-2-LAN IoT device for automatic notification of product fault
- Comes with a weatherproof cover



PART NO.	DESCRIPTION
3321007	DUAL RECIRC SYSTEM WITH UPM3 25-70
1366351	DUAL RECIRC SYSTEM WITH UPS 25-80
1366352	DUAL RECIRC SYSTEM WITH UPS 32-100

COMMON FLUE (CONDENSING MODELS ONLY)

The twin common flue system has been engineered specifically for Indoor 32L & 50L manifold installations, where individual flueing is impractical. Suitable for longer flue lengths of up to 30m* and when less penetration through the roof or wall is required.

Suitable for up to 6 units (All heaters must be the same model)

*To only be used with 32L & 50L indoor models. The maximum flue length will vary depending on the number of heaters in the manifold

Note: 32L & 50L models will require different common flues.

*For indoor commercial project esquires, please contact your local Reece branch or visit www.thermann.com.au/contactus



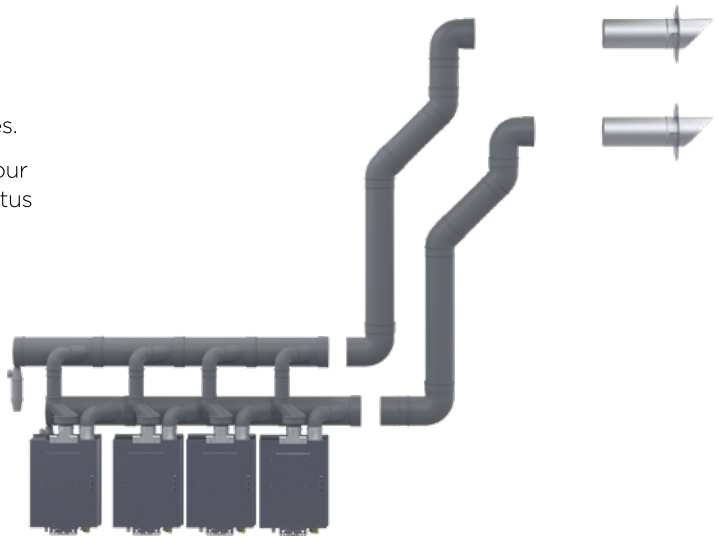

COMMERCIAL ACCESSORIES

ACCESSORY	DESCRIPTION	PART NUMBER
SYSTEM CONTROLLERS The system controller is designed to link up to 12 continuous flow systems, allowing cascade and rotation functions.	**System control for up to 6 continuous flow Units:**	
	Internal System Controller 1-6 (for 32L, 50L)	9507379
	External System Controller 1-6 (for 28L)	1360665
	3m Connection Cable	9507380
	5m Connection Cable	9507381
	System controller for 6 to 12 continuous flow Units	
	System Controller 1-12 (for 28L, 32L and 50L)	9507382
	3m Connection Cable	9507383
	5m Connection Cable	9507384
REMOTE CONTROLLER AND CABLE Designed to allow adjustment of temperature as well as provide fault finding and diagnostic information. Comes with cable to connect remote controller to heater.	Remote Controller	Indoor; 15m cable 9507385
		Outdoor; 3m cable 1307003
		Weatherproof Box only for Remote Controller 1360874
QUICK CONNECT CABLE The quick connect cable is used when linking 2 continuous flow units only.	Quick connect cable 2M NOTE: Remote controller needed for operation	9507386
TANK RECIRCULATION PUMPS To connect continuous flow systems to storage tanks.	**Pump for up to six 28L continuous flow heaters**	
	Tank Circulation Pump (UPS 25-80)	1360137
	Unions	1360139
	Pump for up to six 32L continuous flow heaters or to a maximum of three 50L units continuous flow heaters	
	Tank Circulation Pump (UPS 32-100)	1360136
	Unions	1360138
TANK THERMOSTAT	Tank Thermostat Controller	1360135
UPWARDS FLUE DIVERTER	50L outdoor only	1307018
MAINTENANCE KITS	Suitable for use with 28L & 32L models	1307311
	Suitable for use with 50L models	1307312

COMMERCIAL
DIMENSIONS

50L OUTDOOR UNIT

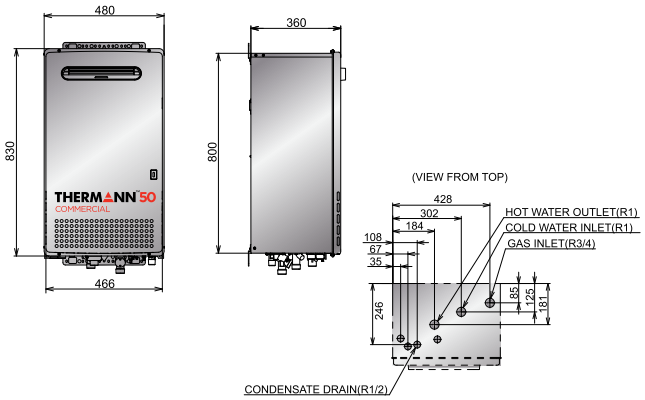

50L INDOOR UNIT

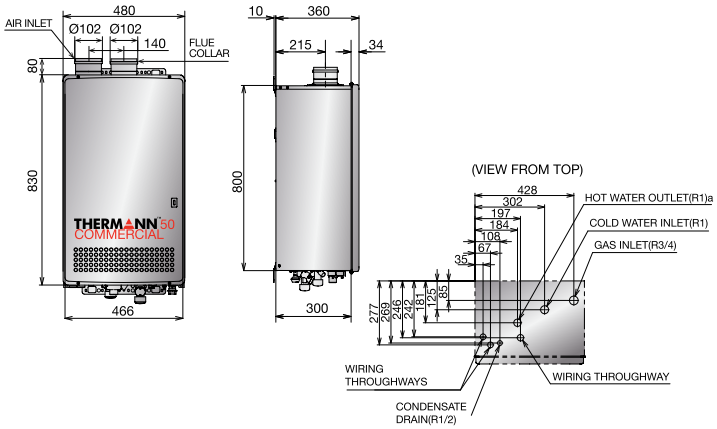

32L OUTDOOR UNIT

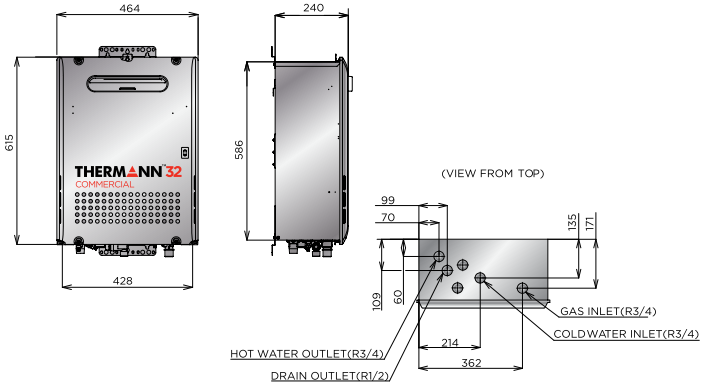

32L INDOOR UNIT

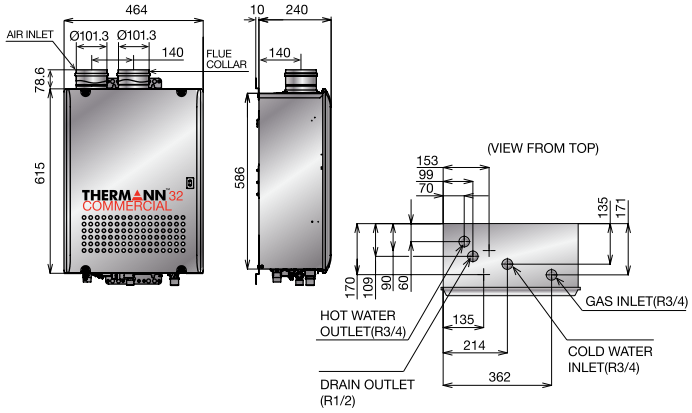

28L OUTDOOR UNIT

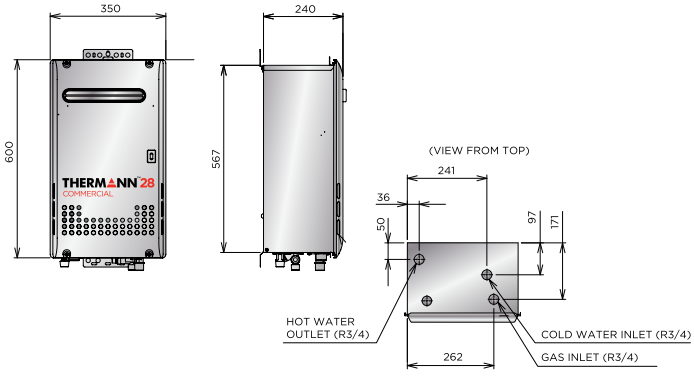

28L INDOOR UNIT

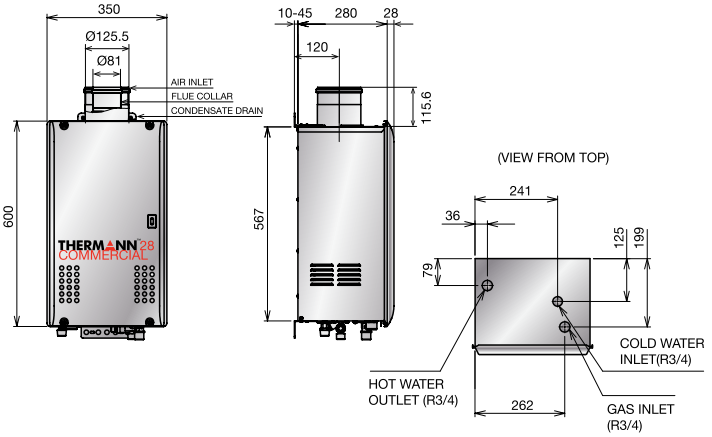

PP1150 INDOOR/OUTDOOR UNIT

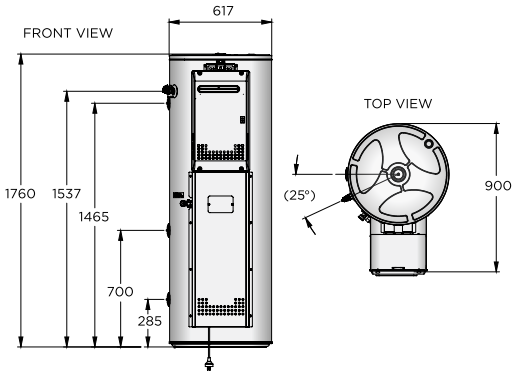

COMMERCIAL ELECTRIC

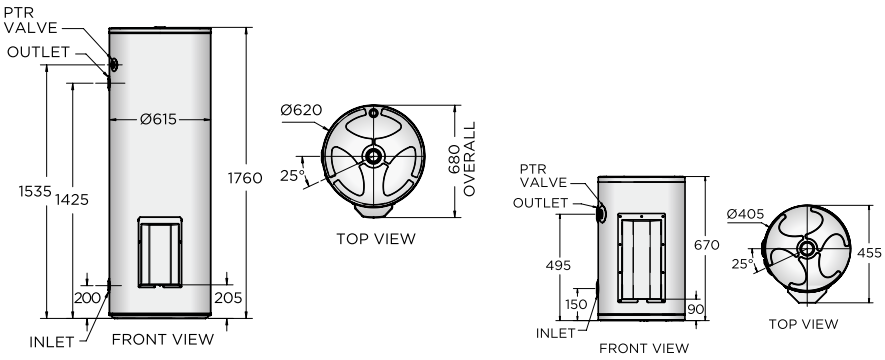

TANK MANIFOLD

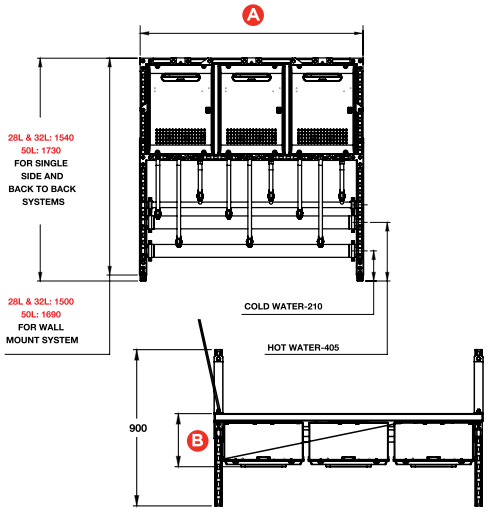

QTY OF UNITS	DIMENSION 'A' (MM)	
	28L	32L & 50L
2 UNIT	794	1040
3 UNIT	1170	1540
4 UNIT	1588	2080
5 UNIT	1964	2580
6 UNIT	2340	3080

VERSION	DIMENSION 'B' (MM)
28L OUTDOOR	305
28L INDOOR	335
32L OUTDOOR	310
32L INDOOR	295
50L OUTDOOR	420
50L INDOOR	420

STORAGE TANK

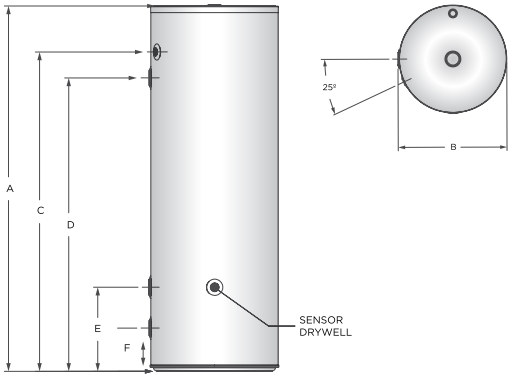

NOMINAL DIMENSIONS (MM)		
MODEL	315THMC0 9507377	400THMC0 9507378
Total Height (A)	1765	1705
Total Diameter (B)	615	705
Relief Valve Height (C)	1540	1430
Outlet Height (D)	1415	1430
Return Height (E)	405	390
Inlet Height (F)	210	235

NOTES

NOTES



Reece. Works for you.™

Call **1800 032 566** or visit **reece.com.au** for your nearest Reece store.

Due to limitations in the printing process the colours in this brochure are a guide only.

The manufacturer/distributor reserves the right to vary specifications or delete models from their range without prior notification. The manufacturer/distributor takes no responsibility for printing errors.
All products enjoy a product replacement warranty. #For full warranty details visit www.reece.com.au/productquality

V7 [BROCHURE CODE 2131617]

THERMANN™ COMMERCIAL | reece®